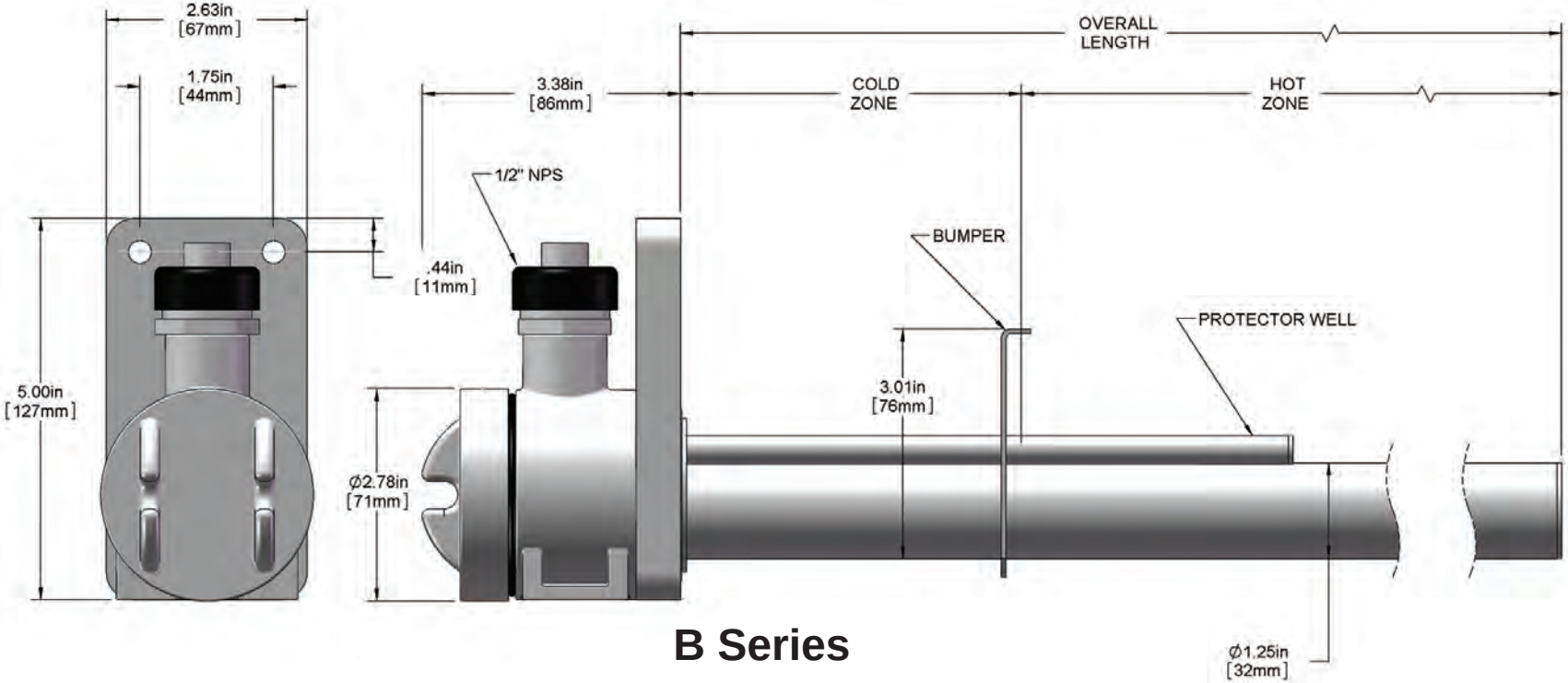

B Series

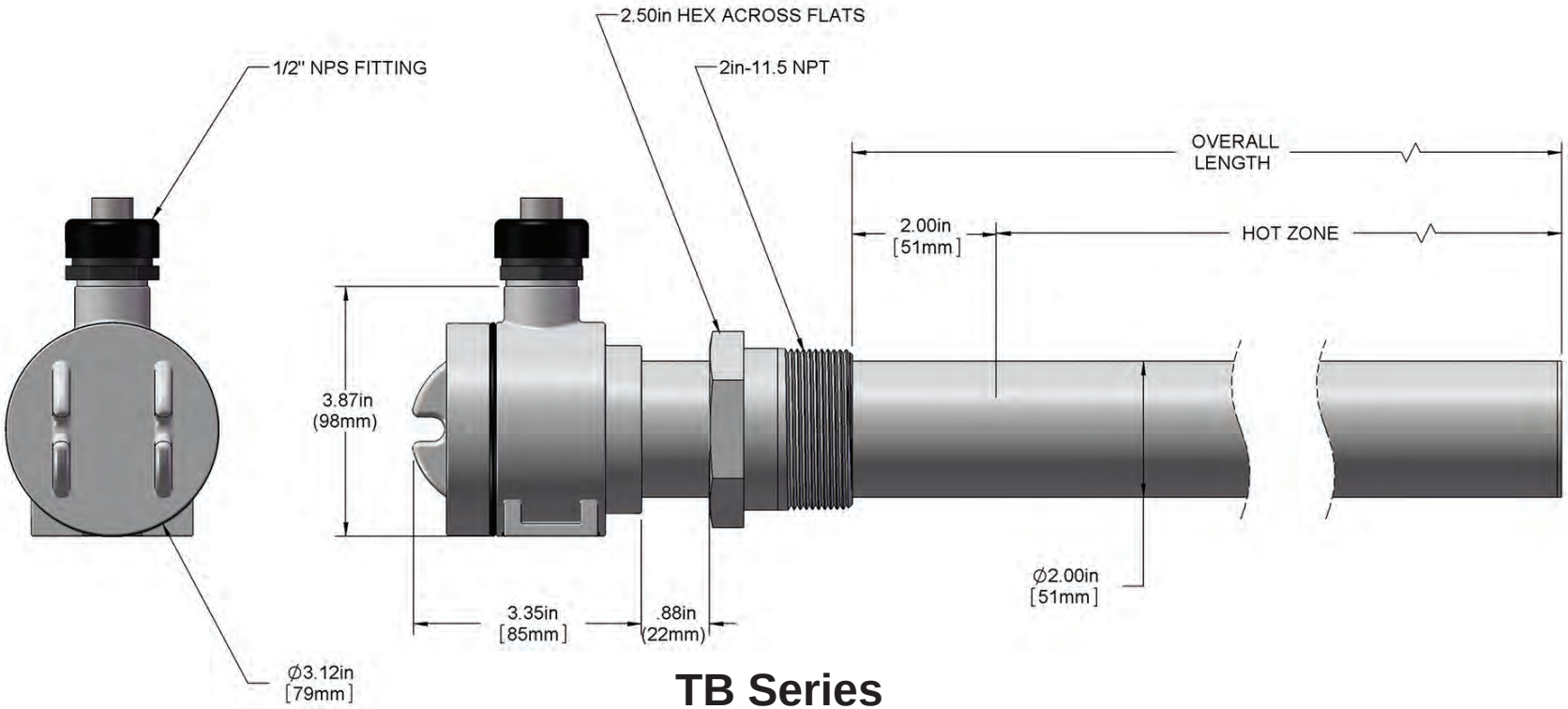

TB Series